PRODUCT INFORMATION PACKET

Model No: 5KCR49UN0107
Catalog No: EG283
General Purpose Motor, 1 HP, 1 Ph, 60 Hz, 100-120/200-240 V, 1800 RPM, 56C Frame, TEFC

Regal and Marathon are trademarks of Regal Rexnord Corporation or one of its affiliated companies.
©2022 Regal Rexnord Corporation, All Rights Reserved. MC017097E

Nameplate Specifications

Output HP	1 Hp	Output KW	0.75 kW
Frequency	60 Hz	Voltage	100-120/200-240 V
Current	11.8-11.4,5.9-5.7 A	Speed	1725/1425 rpm
Service Factor	1.15	Phase	1
Efficiency	77.4 %	Power Factor	0
Duty	Continuous	Insulation Class	B
KVA Code	L	Frame	56C
Enclosure	Totally Enclosed Fan Cooled	Thermal Protection	No Protection
Ambient Temperature	40 °C	Drive End Bearing Size	6203
Opp Drive End Bearing Size	6203	UL	Recognized
CSA	Yes	CE	N
Number of Speeds	1		

Technical Specifications

Electrical Type	Capacitor Start Capacitor Run	Starting Method	SM
Poles	4	Rotation	Counterclockwise/Clockwise
Mounting	Round	Motor Orientation	ANY
Drive End Bearing	Ball	Opp Drive End Bearing	Ball
Frame Material	Rolled Steel	Overall Length	12.97 in
Frame Length	7.68 in	Shaft Diameter	0.630 in
Shaft Extension	1.88 in		
Connection Drawing	52A105381BC	Outline Drawing	52A107781P3

This is an uncontrolled document once printed or downloaded and is subject to change without notice. Date Created:11/28/2022

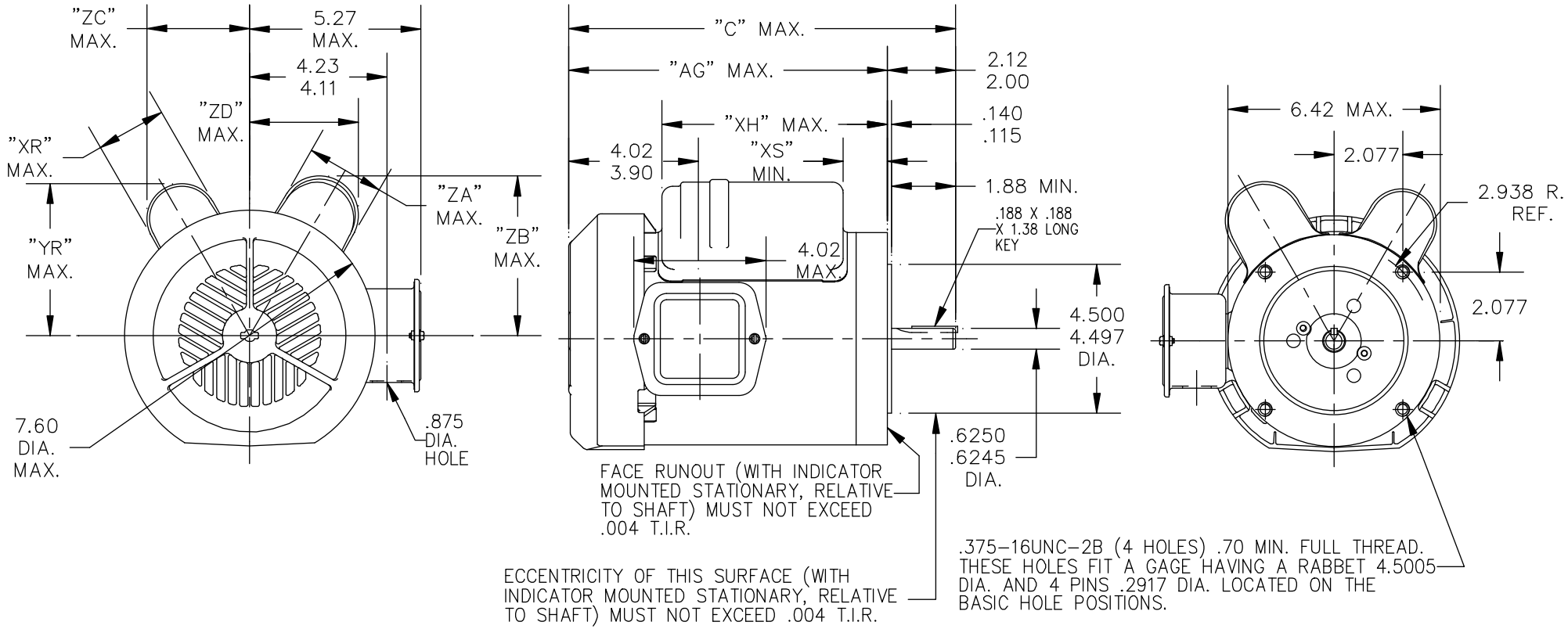

ALL DIMENSIONS ARE IN INCHES

P	TYPE	RBC SIZE	NEMA FR.	"C"	"AG"	"XH"	"YR"	"XR"	"XS"	"ZA"	"ZB"	"ZC"	"ZD"	MIN. SHELL
6	KCR	48	56C	13.69	11.57	7.56	4.68	2.15	1.89	2.15	4.68	3.20	3.20	8.43
5	KCR	48	56C	13.69	11.57	7.56	4.66	2.10	1.89	2.72	5.28	3.14	3.63	8.43
4	KCR	49	56C	14.28	12.16	7.51	4.90	2.40	1.84	2.72	5.27	3.38	3.66	8.99
3	KCR	49	56C	12.97	10.85	7.61	4.68	2.15	1.86	2.72	5.27	3.20	3.66	7.68
2	KCR	49	56C	12.44	10.32	7.54	4.68	2.15	1.79	2.40	4.90	3.20	3.38	7.15
1	KCR	46	56C	11.84	9.72	6.94	4.68	2.15	1.19	2.40	4.90	3.20	3.38	6.55

NO.	REVISION	BY & DATE	CHK
8	REDRAWN IN DRAFT SIGHT NO CHANGES	UD 10/18/12	PKG
7	CHG TO RBC FORMAT PER ISO5-1777	SD 03/03/06	

TOLERANCES UNLESS SPECIFIED

DEC.	INCHES
.X	±0.1
.XX	±0.02
.XXX	±0.005
.XXXX	±0.0005
ANG	±1.0

REGAL BELOIT — REGAL-BELOIT CORPORATION

TITLE: OUTLINE
TEFC-R2 END MAINTED

MAT'L.
FINISH
RFP
DIST
CAD FILE 52A107781

DRAWN M.D.P 03/02/92
CHK
APPD M.D.P 10/22/99
SCALE 1=1
REF
FMF
PREV

SIZE A | DRAWING NO. 52A107781 | REV. 8

THIS DRAWING IN DESIGN AND DETAIL IS OUR PROPERTY AND MUST NOT BE USED EXCEPT IN CONNECTION WITH OUR WORK ALL RIGHTS OF DESIGN AND INVENTION ARE RESERVED
THIS IS AN ELECTRONICALLY GENERATED DOCUMENT – DO NOT SCALE THIS PRINT

10/31/2012 12:40:30 PM - Converted by Connexus

NAME:50101263 9 OBJECT:52A105381BC DATE:04-Jan-06 07:46:28

SHEET 1 | REV 3 | DRAWING NO. 52A105381BC | SIZE

THIRD ANGLE PROJECTION

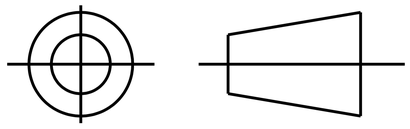

REVISIONS

REV.	DESCRIPTION	DATE	APPROVED
3	UPDATED FORMAT	01/04/06	MAM

CCW/CW ROTATION - DUAL VOLTAGE
TYPE KCR

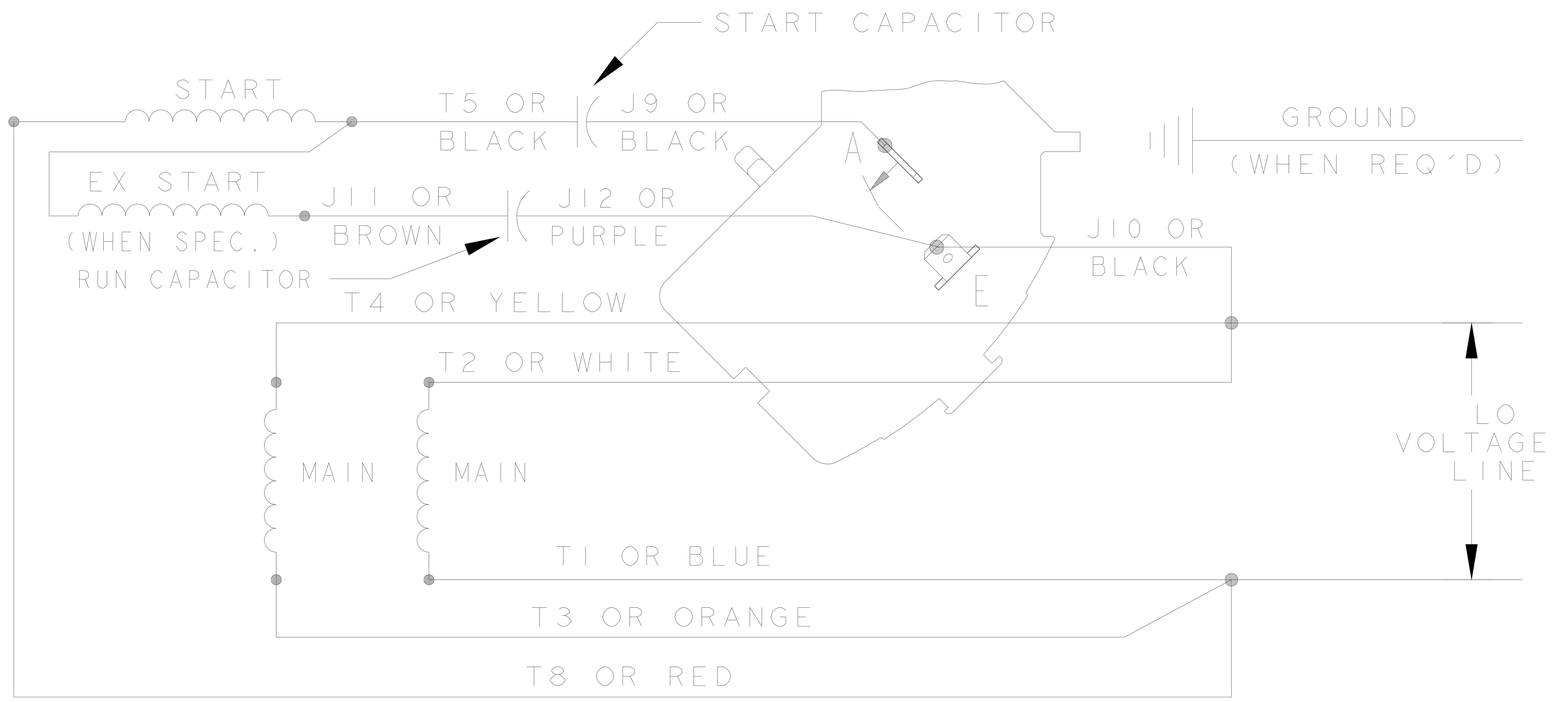

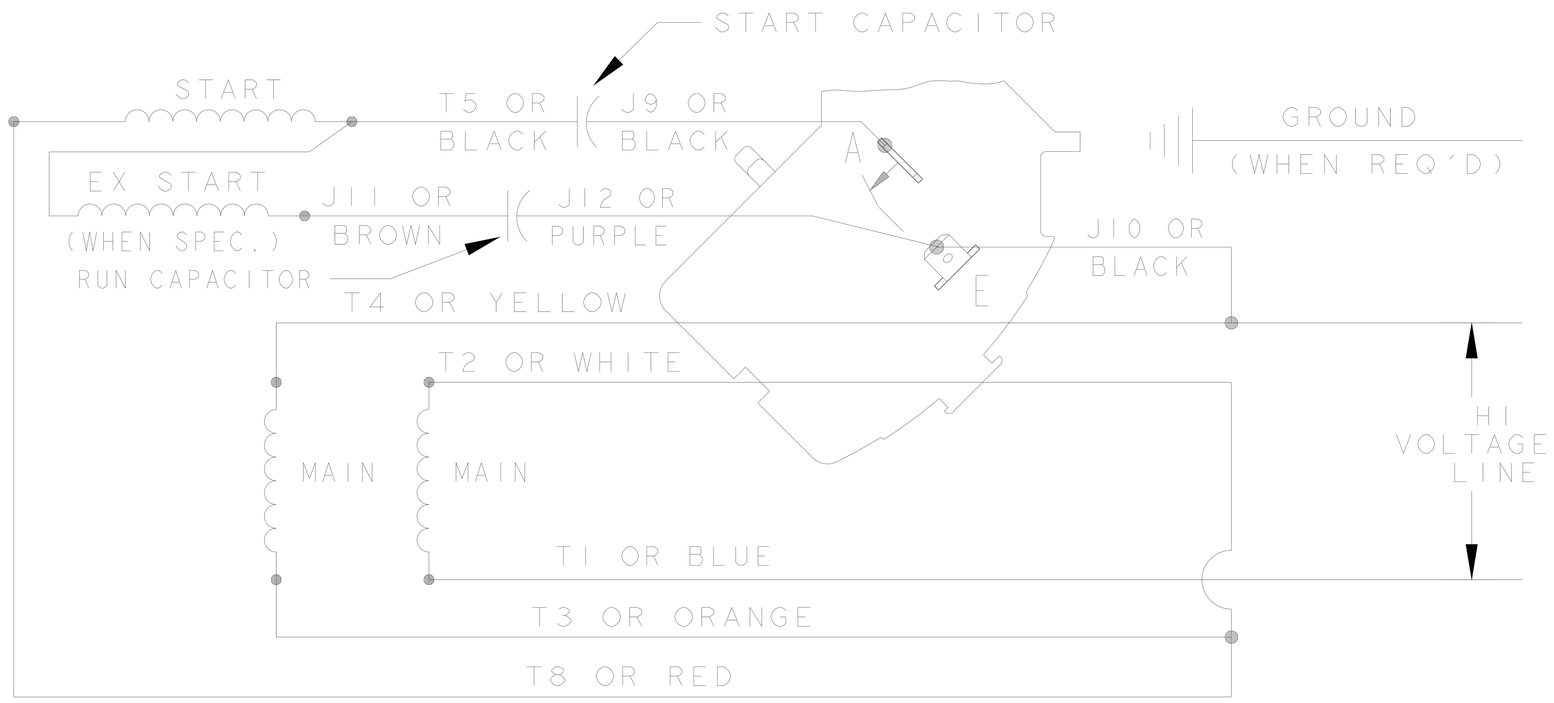

NOTE#1 - TO REVERSE ROTATION, INTERCHANGE T8 RED AND J10 BLACK LEADS.
NOTE#2 - WHEN MORE THAN ONE CAPACITOR IS USED, CONNECT IN PARALLEL.

SWITCH (H) - 115D958AA

REF. DIAG. - 119A9324

CONNECTION LABEL - 52X332917

SIGNATURES		DATE
MODEL	M.D.PAPE	05/09/90
DETAIL	.	.
CHECKED	.	.
ENGRG	.	.
MFG	.	.
QUALITY	.	.
ISSUED	M.D.P.	05/09/90

SOLID MODEL: 52A105381BC

FOR ADDITIONAL INFO REFER TO:
APPLIED PRACTICES .
DIMENSIONS ARE IN INCHES
MATERIAL .

REGAL BELOIT

REGAL-BELOIT CORPORATION

TITLE CONNECTION DIAGRAM

FMF: 5KCR39QN9822G

SIZE A | DRAWING 52A105381BC | REV 3

SCALE: 1.000 | REF. No: . | SHEET 1 OF 1